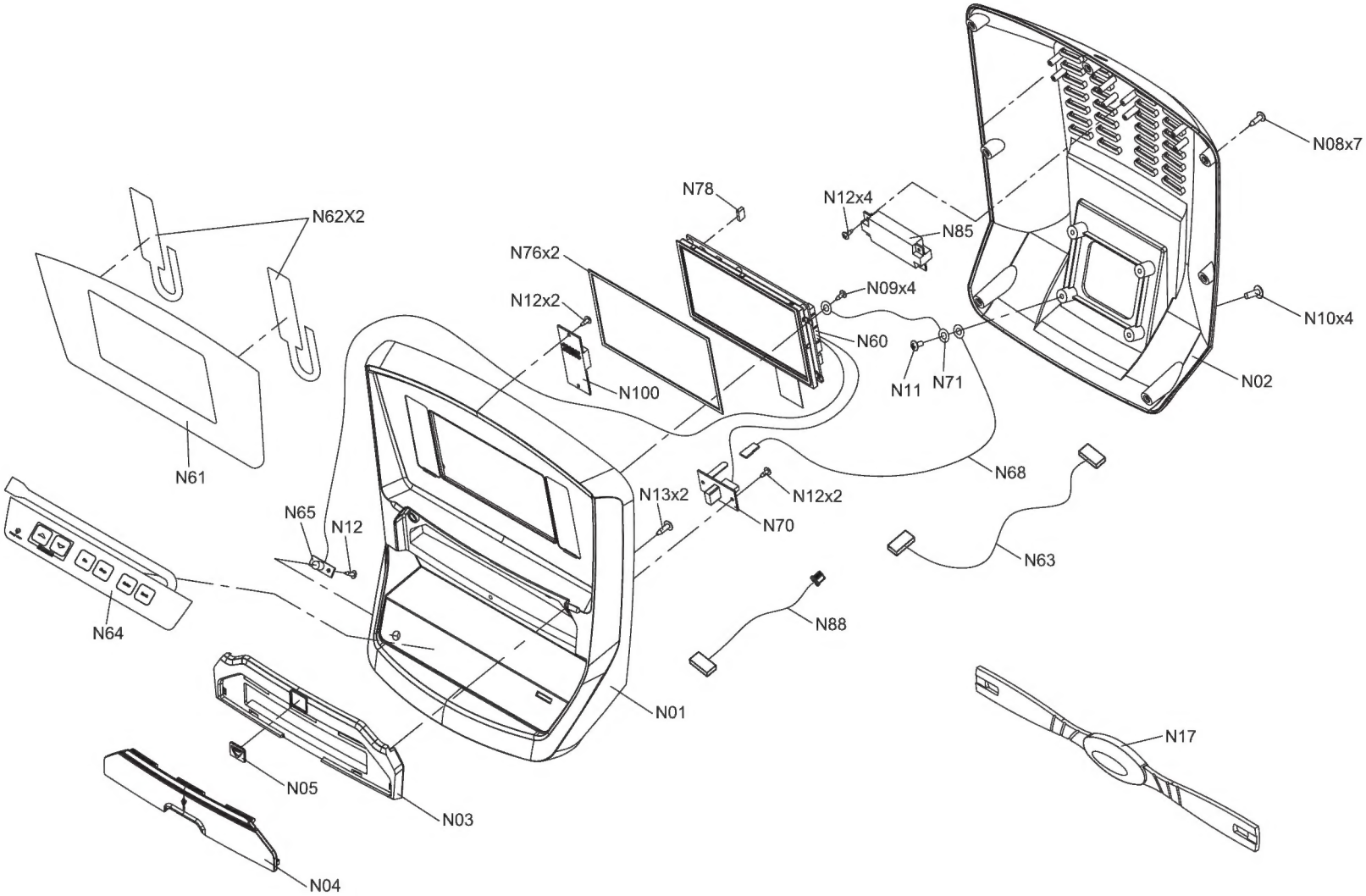| | | | |
|---|---|---|---|
| DRAWING NO | EP262-AN1 | | |
| PART NAME | Console Set | | |
| PART NO | 1000221906 | REV | B |
| APPROVE | | DATE | |